PMI 6 primo

PILZ
THE SPIRIT OF SAFETY

- Operator terminals

Operating Manual-1004647-EN-02

1 Introduction

1.1 Validity of documentation

This operating manual is valid for the following products

- PMI 607 primo
- PMI 612 primo
- PMI 638 primo

It is valid until new documentation is published.

This operating manual explains the function and operation, describes the installation and provides guidelines on how to connect the product.

Please also refer to the following documents from the motion control range:

- The configuration and programming software for motion control devices (e.g. CODESYS, PASmotion) can be found on the Internet at www.pilz.com.
- The manuals for Pilz products from the PMC product area are available on the supplied DVD "Drive technology PMC – Operating manuals".

You will need to be conversant with the information in these documents in order to fully understand this operating manual.

1.2 Using the documentation

This document is intended for instruction. Only install and commission the product if you have read and understood this document. The document should be retained for future reference.

1.3 Definition of symbols

Information that is particularly important is identified as follows:

DANGER!

This warning must be heeded! It warns of a hazardous situation that poses an immediate threat of serious injury and death and indicates preventive measures that can be taken.

WARNING!

This warning must be heeded! It warns of a hazardous situation that could lead to serious injury and death and indicates preventive measures that can be taken.

CAUTION!

This refers to a hazard that can lead to a less serious or minor injury plus material damage, and also provides information on preventive measures that can be taken.

NOTICE

This describes a situation in which the product or devices could be damaged and also provides information on preventive measures that can be taken. It also highlights areas within the text that are of particular importance.

INFORMATION

This gives advice on applications and provides information on special features.

2 Overview

2.1 Device structure

The PMI 6 primo

- is an operator terminal that is used to operate and monitor technical processes
- is a motion controller used to automate multi-axis motion sequences. The device contains a PLC with the functionality of a logic and motion controller.

2.1.1 Device features

- Touch-screen
  - Capacitive (PMI 607 primo, PMI 612 primo)
  - Resistive (PMI 638 primo)
- Character set: Unicode
- Memory:
  512 MB DDR SDRAM
- Real-time clock, battery-buffered
- User-specific applications and various visualisation software packages can be installed
- Logic controller universally programmable in accordance with IEC 61131-3
- Motion controller
  - Speed axes
  - Positioning axes
  - Synchronisation axes (electrical cam disk)
  - Path axes (interpolation)
  - Technology functions (CNC, curve calculation)
- Interfaces
  - Ethernet TCP/IP
    - Modbus TCP
  - EtherCAT
  - 1 CANopen/ 1 PROFIBUS DP interface
  - 1 SD card slot
  - 1 serial interface
  - 2 USB host interfaces
- Supply voltages for
  - Device
- Memory for
  - Operating system
  - Data
  - Device project with user program

- Reset pushbutton
  - To change between operating states
  - For a hardware reset (cold start)
- LED display for device's operating status

2.2 Front view

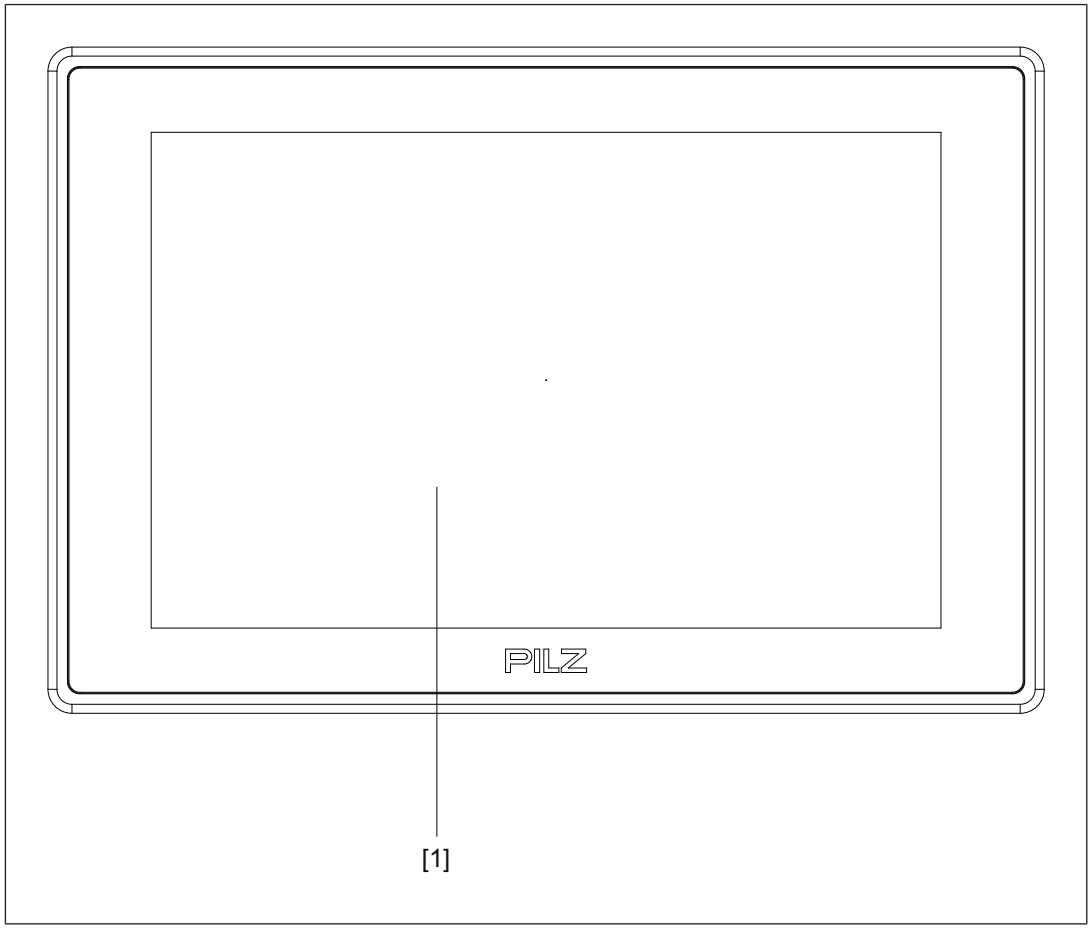

Legend

[1] Touchscreen (see Technical details [📖 69])

2.3 Scope of supply

- Operator terminal
- Retaining clamps
- Connector plug for power supply
- Projection stand
- RJ45 cable for fieldbus junction box
- SD card as application memory
- DVD "Drive technology PMC – Operating manuals"
- Additionally on PMI 612 primo:
  Press-in frame PMI X12

3 Safety

3.1 Intended use

This device is used to operate and monitor technical processes.
The PMI provides the opportunity to install third-party software. This may also have an effect on the operation of motion control functions. Pilz GmbH & Co. KG accepts no liability for any damages, nor does it provide support or any guarantee for the functional efficiency of the installed software.

INFORMATION

Ensure that the visualisation software is suitable for the processor type X86 and the operating system Windows Embedded Compact 7.

CAUTION!

The unit is not designed for use in applications with stringent safety requirements (e.g. E-STOP).

The PMI 6 primo is suitable for use in logic and motion control applications.

Examples of typical application areas for the product are

- Clocked production machinery
- Continuous manufacturing processes (winding, flying saw, cross cutter)
- Machine tools
- Packaging machines
- Pick and place applications

The following is deemed improper use in particular

- Any component, technical or electrical modification to the product,
- Use of the product outside the areas described in this manual,
- Use of the product outside the technical details (see Technical details [📖 69]).

NOTICE

EMC-compliant electrical installation

The product is designed for use in an industrial environment. The product may cause interference if installed in other environments. If installed in other environments, measures should be taken to comply with the applicable standards and directives for the respective installation site with regard to interference.

3.2 Safety regulations

3.2.1 Use of qualified personnel

The products may only be assembled, installed, programmed, commissioned, operated, maintained and decommissioned by competent persons.

A competent person is a qualified and knowledgeable person who, because of their training, experience and current professional activity, has the specialist knowledge required. To be able to inspect, assess and operate devices, systems and machines, the person has to be informed of the state of the art and the applicable national, European and international laws, directives and standards.

It is the company's responsibility only to employ personnel who

- Are familiar with the basic regulations concerning health and safety / accident prevention,
- Have read and understood the information provided in the section entitled Safety
- Have a good knowledge of the generic and specialist standards applicable to the specific application.

3.2.2 Warranty and liability

All claims to warranty and liability will be rendered invalid if

- The product was used contrary to the purpose for which it is intended,
- Damage can be attributed to not having followed the guidelines in the manual,
- Operating personnel are not suitably qualified,
- Any type of modification has been made (e.g. exchanging components on the PCB boards, soldering work etc.).

3.2.3 Disposal

- When decommissioning, please comply with local regulations regarding the disposal of electronic devices (e.g. Electrical and Electronic Equipment Act).

3.3 Standards

To use the device correctly you will need to have a good knowledge of the relevant standards and directives. The following standards are relevant:

- EN 61131-1: Programmable controllers – Part 1: General information
- EN 61131-2: Programmable controllers – Part 2: Equipment requirements and tests
- EN 61131-3: Programmable controllers – Part 3: Programming languages

Please note this is not an exhaustive list of safety standards and directives.

Where standards are undated, the 2014-08 latest editions shall apply.

3.4 Unit-specific safety regulations

Before you install or commission the system, you should refer to any guidelines laid down by the control manufacturer or operator.

3.4.1 Installation site

- Do not position the device close to highly flammable materials.
- When installing the device within a control cabinet, you must ensure the ventilation slots are not obstructed. otherwise the device could be damaged through overheating.
- Protect the device from direct sunlight and dust.
- Please note the guidelines given under “Installation”.

3.4.2 Measures to protect against interference

- If necessary, use bulkhead separators to protect the unit from sources of interference.
- Inductive loads within the environment (e.g. contactor, relay and solenoid valve coils) should be wired using suppression elements (e.g. RC elements). This is particularly important if these inductive loads are fed from the same supply.
- The power cables and the data cables should be physically separated from each other in their own conduits (recommended minimum distance: 10 cm/3.94"). This will avoid inductive and capacitive interference.
- The prescribed earth point ⏚ for the functional earth guarantees compliance with noise immunity requirements.
  Connect the functional earth to the central earth point in star form. A cable cross section of at least 1.5 mm² should be used for the connection. Connections should be kept as short as possible.

3.4.3 Voltage supply

- The supply voltage must be +24 V DC

CAUTION!

Safe electrical isolation must be ensured for the external power supply generating the 24 V voltage supply. Failure to do so could result in electric shock. Power supplies must conform to DIN VDE 0551/EN 60742 and EN 50178.

3.4.4 Operation

- Plan the system correctly to ensure that a communication error between the PMI and the host computer does not cause a malfunction.
- Do not operate the touchscreen interface using hard or heavy objects or apply excessive pressure.
- The maximum ambient temperature must not be exceeded when using the unit.
- Do not pour liquids over the unit or insert any objects into the unit.
- When in storage and during operation, protect the unit from vibration and shock.
- Avoid using chemicals close to the system.

3.4.5 Maintenance

- Do not use thinners or organic solvents to clean the device and touch-screen user interface.

Further information on care and maintenance of the touch-screen can be found in the chapter Care and maintenance [📖 57].

4 Function description

4.1 Device properties

4.1.1 Controller

The device includes a programmable logic controller with motion control functionalities. These functionalities are described as "motion control software" in the following text. The controller has volatile and non-volatile memory for the operating system, the data and the device project with the user program.

It can be used for logic and motion control of intelligent drives.

User programs can be programmed in the main IEC 61131-3 languages. The software CODESYS is used to program the PLC functionality. The motion control software runs as a stand-alone task.

The motion control software can also access inputs and outputs on networked servo amplifiers from the PMC product area.

The device has fieldbus interfaces for communication with the periphery.

An LED provides information about the controller's operating states.

4.1.2 Visualisation

The device has a memory in which visualisation software can be installed. With the help of this software, processes can be shown on the display and directly influenced via the touchscreen. A fieldbus interface (CANopen), Ethernet (e.g.: Modbus), PROFIBUS, EtherCAT and a RS232 interface are available for the transfer of data, e.g. diagnostic data, and for communication with other subscribers.
The device is equipped with a battery-buffered real-time clock. Only Pilz can exchange the battery.

4.2 Side view

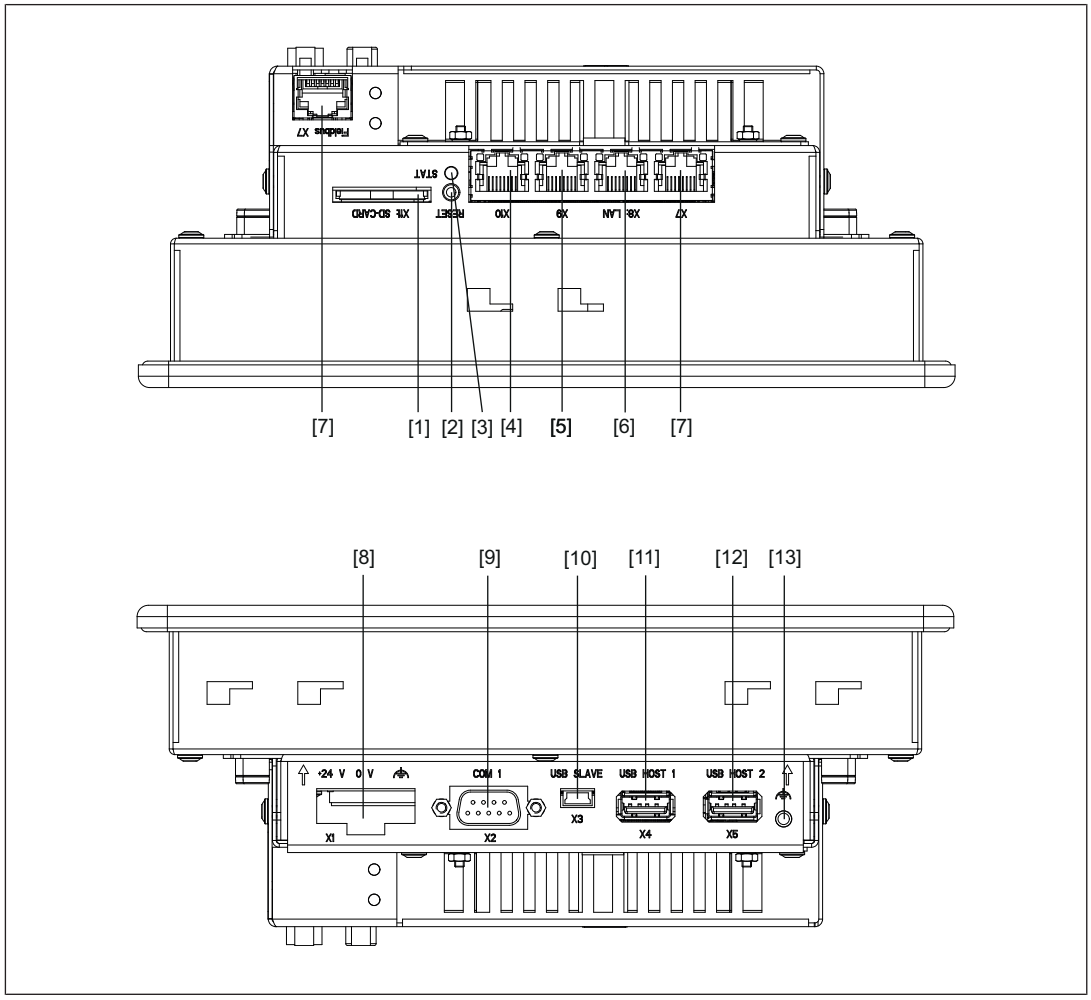

Legend

[1] SD/SDHC card slot

[2] Reset pushbutton

[3] Status LED

[4] Reserved

[5] EtherCAT interface

[6] Ethernet interface

[7] Fieldbus junction box (PROFIBUS DP-Slave interface and CANopen interface, see Rear view [📖 16])

[8] Supply voltage +24 V DC

[9] Serial interface COM1 (RS232)

[10] USB Slave

[11] USB Host 1

[12] USB Host 2

[13] Functional earth

4.3 Rear view

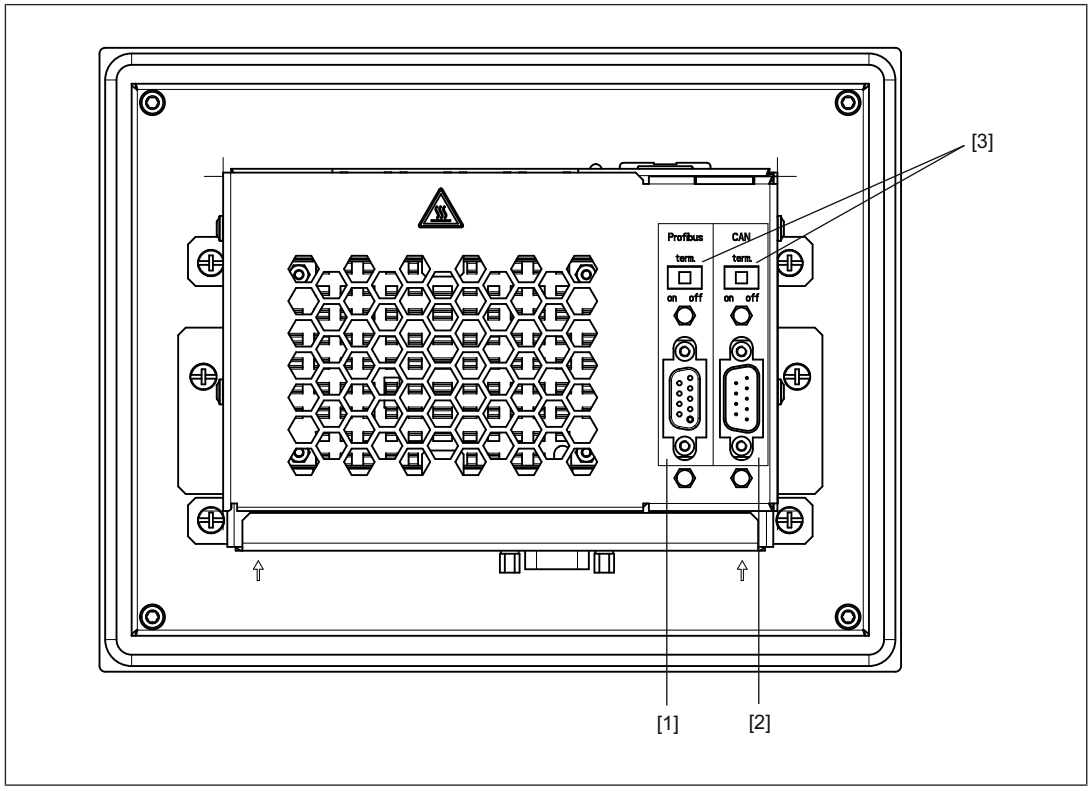

Legend

[1] PROFIBUS DP-Slave interface

[2] CANopen interface

[3] Switch for the terminating resistors

4.4 Interfaces

4.4.1 Overview

The PMI 6 primo has various fieldbuses for communication with the periphery. The interfaces are suitable for the following applications:

- **CANopen as a drive bus**
  - Real-time capable networking between CAN devices and the motion control software
  - Suitable for applications
    - with ≤ 16 subscribers
    - with cycle time of ≥ 1 ms
- **PROFIBUS DP Slave**
  - Networking between the motion control software and a PROFIBUS Master.
  - Suitable for data exchange with a third party controller.
- **Ethernet**
  - **Ethernet TCP/IP**

  - Communication between the programming device and the motion control software
  - Suitable for configuration, programming, commissioning
- **Modbus/TCP**
  - Communications protocol based on Industrial Ethernet (TCP/IP over Ethernet).
  - Suitable for networking between the motion control software and a PSS 4000, for example.

- **EtherCAT as a drive bus**
  - EtherCAT is an Ethernet-based master bus system suitable for industrial use. It is suitable for real-time capable networking between the motion control software and the servo amplifier PMCprotego D.
  - The PMI 6 primo acts as Master
  - Suitable for applications
    - with ≤ 32 subscribers
    - with cycle time of 1 ms
- **RS232 interface (COM1)**
  - Communication between the programming device and the motion control software
  - Suitable for configuration, programming, commissioning

4.4.2 CANopen

The CANopen interface is suitable for networking drive components at field level. It meets the requirements defined in the communications protocol DS-301.

The following device classes with CANopen device profiles are supported:

- I/O modules DS-401
- Electrical drives DS-402
- Encoder DS-406

The CAN network is designed as a linear structure. The CANopen communication protocol is based on CAN.

- CAN networking with the motion control software is suitable for applications with a maximum subscriber number of ≤ 16 and a cycle time ≥ 1 ms.
- Only CAN devices that are known to the controller or support a corresponding device profile can be operated in the motion control software's CAN network.
- CAN devices detected by the motion control software are ready for operation immediately after the initial network run-up. No complex configuration of the CAN devices is required.
- The overall cable length and the length of the stub lines depend on the transmission rate.
- Process data objects (PDO) are defined for each CAN device type and cannot be customised by the user.
- For servo amplifiers, the "FS" command can be used to set which process data is to be exchanged between the motion control software and the servo amplifier (see "PMCprimo Programming Manual").
- The signal lines must be terminated with resistors (120 Ohm) on the first and last subscriber. The resistors are generally integrated within the connected devices and can be activated there. For a PMI 6 primo a terminating resistor can be activated in the fieldbus junction box.

4.4.3 PROFIBUS DP

PROFIBUS is an open fieldbus standard. Communication is defined in IEC 61158 and IEC 61784. Further provisions have been defined in specifications published by the PROFIBUS User Group. These specifications are available from PROFIBUS International.

On a certain unit type, the PROFIBUS interface is available together with a CANopen interface on an RJ45 socket (X7).

Properties:

- The PROFIBUS is configured using the CD command: Slave address, address range, see PMCprimo Programming Manual.
- A total of up to 108 bus variables can be read and written (see PMCprimo Programming Manual):
  - Address space of bus variables: $B1 to $Bx108 (can be set using the CD command).
  - Data width: 16 Bit including sign
  - Value range: -32768 to 32767 (Hex: 0x0000 bis 0x7FFF).

- When changing the variable content, any programs can be started if the bus variables have been defined as trigger variables.

INFORMATION

The GSD file is available on the supplied CD-ROM. The name of the description file can be found in the chapter Technical details [📖 69].

INFORMATION

Please also refer to the installation guidelines published by the PROFIBUS User Group.

4.4.4 Ethernet

The Gigabit Ethernet interface (X8) connects the PMI 6 primo to a programming device for configuration, programming and commissioning. The interface can also be used to connect a visualisation device.

The Gigabit Ethernet interface is compatible with 1000Base-T (Standard Gigabit Ethernet). Data exchange is possible via Modbus/TCP.

4.4.5 EtherCAT

EtherCAT uses the Ethernet Standard (IEEE 802.3) without modifications.

The PMI 6 primo does not require a setting (CD command) to use the EtherCAT master as a drive bus.

To do this, a CODESYS project has to be active (Boot project), where all the EtherCAT devices are configured.

Before the CODESYS project starts, all the devices must be operational so that they are detected by the EtherCAT master.

The address assignment of the network subscribers is performed automatically in the sequence of the physical arrangement. The sequence of the inserted devices in the device tree with the physical arrangement has to match.

Please note the following during operation:

- The device sequence may no longer be modified.
- It is not permitted to add or remove devices.

The PMI 6 primo is an EtherCAT master which is the subscriber in the segment that can actively send an EtherCAT frame, all the other subscribers only forward the frames. This prevents unforeseeable delays and it guarantees real-time capability.

Bit errors in the transmission are reliably detected in the evaluation of CRC check sums. Rare interferences can be detected and localised with EtherCAT even if the interference does not influence the functionality of the machine.

4.5 Reset pushbutton

The "RESET" pushbutton is mounted in a recess on the front of the device. It can only be accessed using an appropriate tool (e.g. a pin).

The following actions can be triggered by pressing the "RESET" pushbutton:

- Change from "Startup" operating status to "Boot Menu"
- Hardware reset (cold start): Change from operating states "RUN" or "STOP" to "Startup" (if a USB stick is inserted, any device data present will be copied, see Functions of the reset button.)
- Change from "RUN" operating status to "STOP"
- Change from "STOP" operating status to "RUN"

INFORMATION

For further information on the reset pushbutton see Operation.

4.6 Software

Various tools are available for planning, configuration, programming and commissioning. They are used to create a project:

- PASmotion

  PASmotion is used to parametrise and commission the motion controller and the servo amplifier PMCprotego D.

  – Terminal program: The terminal can be used to send commands directly to the hardware. It can also be used for firmware updates and for basic configuration of the motion control software.

  – Oscilloscope function: PScope is a PC-based oscilloscope with up to 4 channels. It can be used to record and visualise signals from controllers and servo amplifiers.

  – Elliptical curve tool: PMotion is a tool for constructing elliptical curves.

- Development environment in accordance with IEC 61131-3

  CODESYS is a development environment for programming controllers in accordance with IEC 61131-3. Additional commands for motion sequences have been added. In addition to core CODESYS packages the "PMC Programming Tool" also contains the target support packages.

The software tools are available on the Internet at www.pilz.com.

INFORMATION

The "PMC Programming Tool" for IEC 61131-3 programming contains the CODESYS Version 3.5.

5 Installation

5.1 Safety

NOTICE

Damage due to electrostatic discharge!

Electrostatic discharge can damage components. Ensure against discharge before touching the product, e.g. by touching an earthed, conductive surface or by wearing an earthed armband.

Please read the safety guidelines before assembling and installing the device.

Before you install or commission the system, you should refer to any guidelines laid down by the plant manufacturer or operator.

5.1.1 Installation site and unit surroundings

NOTICE

Damage due to heat accumulation!

To avoid the accumulation of heat, a distance of 10 cm/3.94" should be maintained around the device.

To achieve optimum air circulation, install the device at an angle of 45° - 90°.

- Keep as large a distance as possible between the system and any electromagnetic fields. particularly when frequency converters are nearby.
- Protect the device from direct sunlight and dust.
- Do not use chemicals close to the device.
- Ensure the maximum ambient and operating temperatures are not exceeded.
- Ensure that neither liquids nor objects can enter the device at any time.
- Do **not** use the device in environments with flammable materials.

5.2 Dimensions

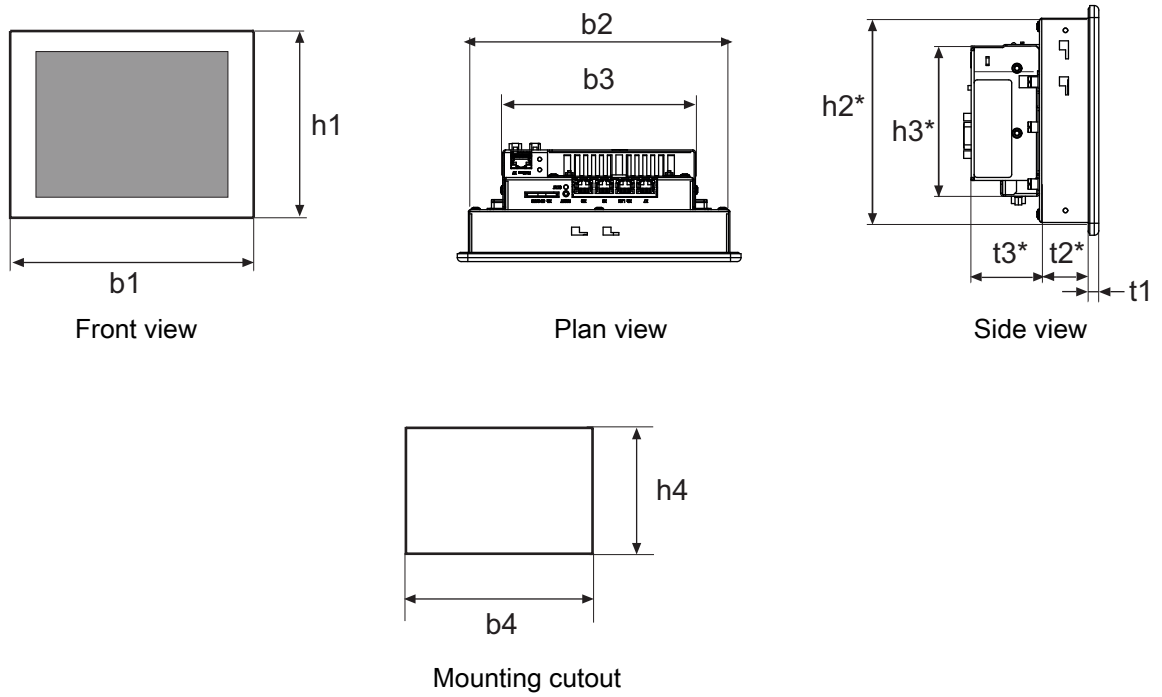

	PMI 607 primo	PMI 612 primo	PMI 638 primo
b1/mm h1/mm	216 (8.504") 153 (6.024")	332 (13.071") 222 (8.740")	412 (16.221") 332 (13.071")
b2/mm h2*/mm t2*/mm	199 (7.835") 136 (5.354") 33.5 (1.319")	315 (12.402") 205 (8.071") 31.5 (1.240")	390 (15.354") 308,4 (12.142") 31.4 (1.236")
b3/mm h3*/mm t3*/mm	146,6 (5.772") 101 (3.976") 45.5 (1.791")	146,6 (5.772") 101 (3.976") 45.5 (1.791")	146,6 (5.772") 101 (3.976") 45.5 (1.791")
t1/mm	6 (0.236")	6 (0.236")	6 (0.236")
b4/mm h4/mm	200 + 1 (7.874" + 0.039") 137 + 1 (5.394" + 0.039")	316 + 1 (12.441" + 0.039") 206 + 1 (8.11" + 0.039")	393 + 1 (15.472" + 0.039") 311 + 1 (12.244" + 0.039")

h*/t* = Dimensions without connections

Allow extra for hardware connections!

5.3 Installing the unit

When installing the device, please note the following:

- For reasons of stability, the front panel, console or control cabinet should have a wall thickness of at least 2.5 mm.
- To avoid the accumulation of heat, a distance of 10 cm/3.94" should be maintained around the device.
- Ensure the information given for the ambient and operating temperatures in the technical details is observed.
- IP65 protection can only be guaranteed when
  - the device's fixing screws are tightened with the following torque: min. 0.3 Nm, max. 0.5 Nm.
  - the gasket is not damaged.
  - the wall thickness is at least 2.5 mm.

5.4 Installation

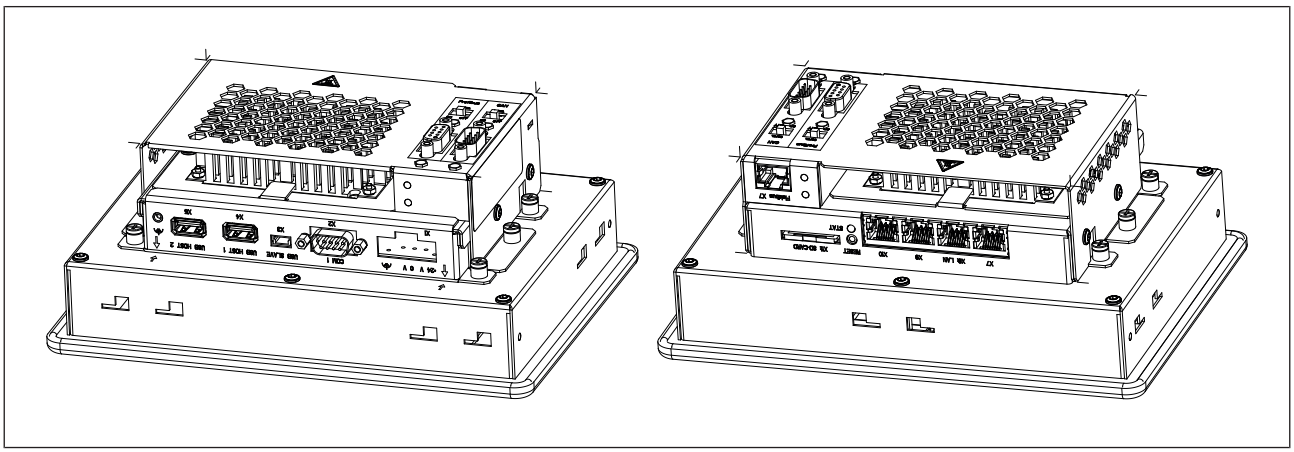

Fig.: Installation PMI 607 primo

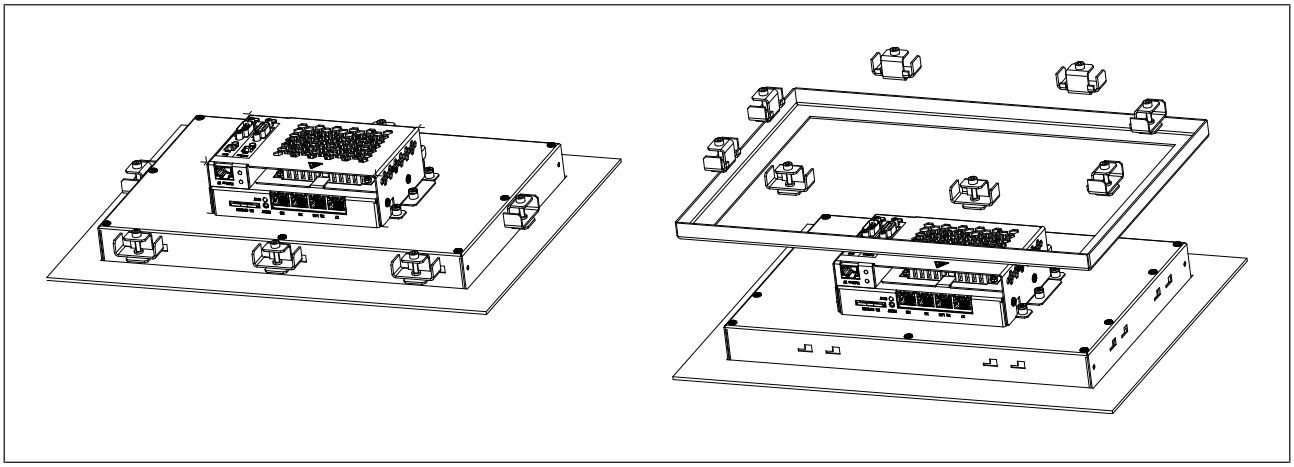

Fig.: Installation PMI 612 primo

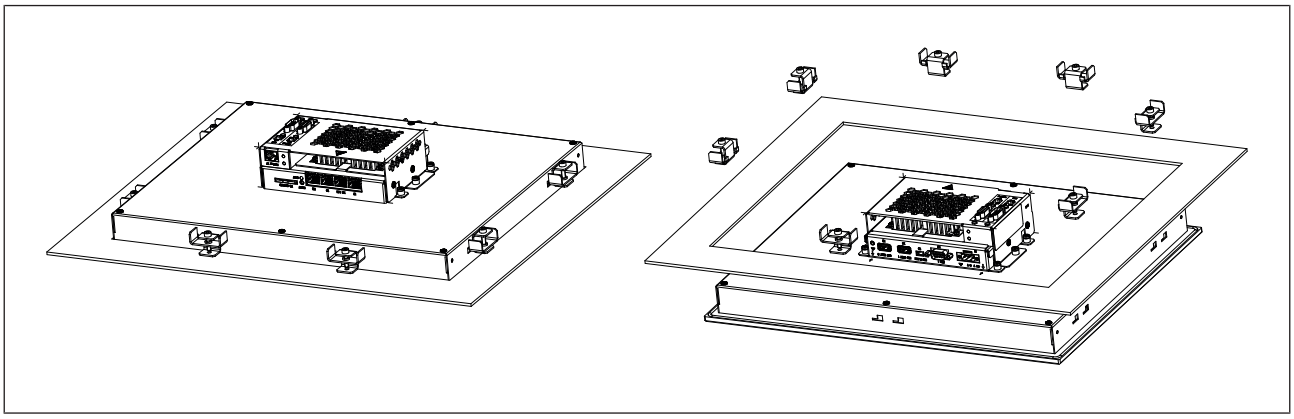

Fig.: Installation PMI 638 primo

6 Wiring

6.1 General wiring guidelines

- Electrical or electronic components which could cause interference (contactors, thyristors, relay coils and solenoid valve coils) should be physically separate from data lines. We recommend you use a sheet metal (MU metal) bulkhead between both areas.
- Data cables and power cables should be laid separately to avoid capacitive and inductive transmission (recommended minimum distance = 10 cm/3.94").
- Shielded data lines should also be laid in a different cable duct to the main power cables.
- Power cables should be as short as possible.
- Power cables should be twisted pair cables.
- We recommend a max. length of 2 m for the USB cable, to guarantee reliable data transfer.
- Use cables with a cross section of 0.5 … 1.0 mm², crimp connectors without plastic collar in accordance with DIN 46228/1 for the fieldbus terminal connections.

6.1.1 Shielding

- Connect the power cable shield with low impedance to earth.
- Use only shielded data lines.
- For high-frequency reasons, we recommend that the shielding on the data line cable (RS 232 cable) is earthed on both sides. If you are using longer cables and there is the possibility of transient currents, we recommend one of the following methods:
  - Use equipotential bonding conductors
  - Use electrical isolation
- Connect data line shields to a bus bar.
- Make the connection of the bus bar to the control cabinet/system as short and with as low impedance as possible.
- Fasten the braided shield to the shield bar over as large a surface area as possible (e.g. with metal hose clips or PUK cable clips).

6.1.2 Measures to protect against interference voltages

- Wire-up inductive loads (e.g. contactor coils, relay coils and solenoid valve coils) using suppression elements (e.g. RC networks). This is particularly important if these inductive loads are very close to the power supply or are fed from the same supply.
- If strong magnetic fields are present, we recommend you use a bulkhead separator, i.e. metal sheet (MU-metal).

6.2 Supply voltage

The connection for the 24 V DC supply voltage is located on the side of the housing.

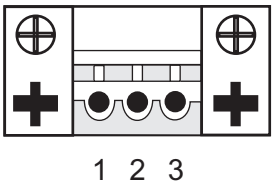

Fig.: Layout of supply voltage connector

- 1: Functional earth
- 2: 0 V
- 3: + 24 V DC

6.3 Connection example

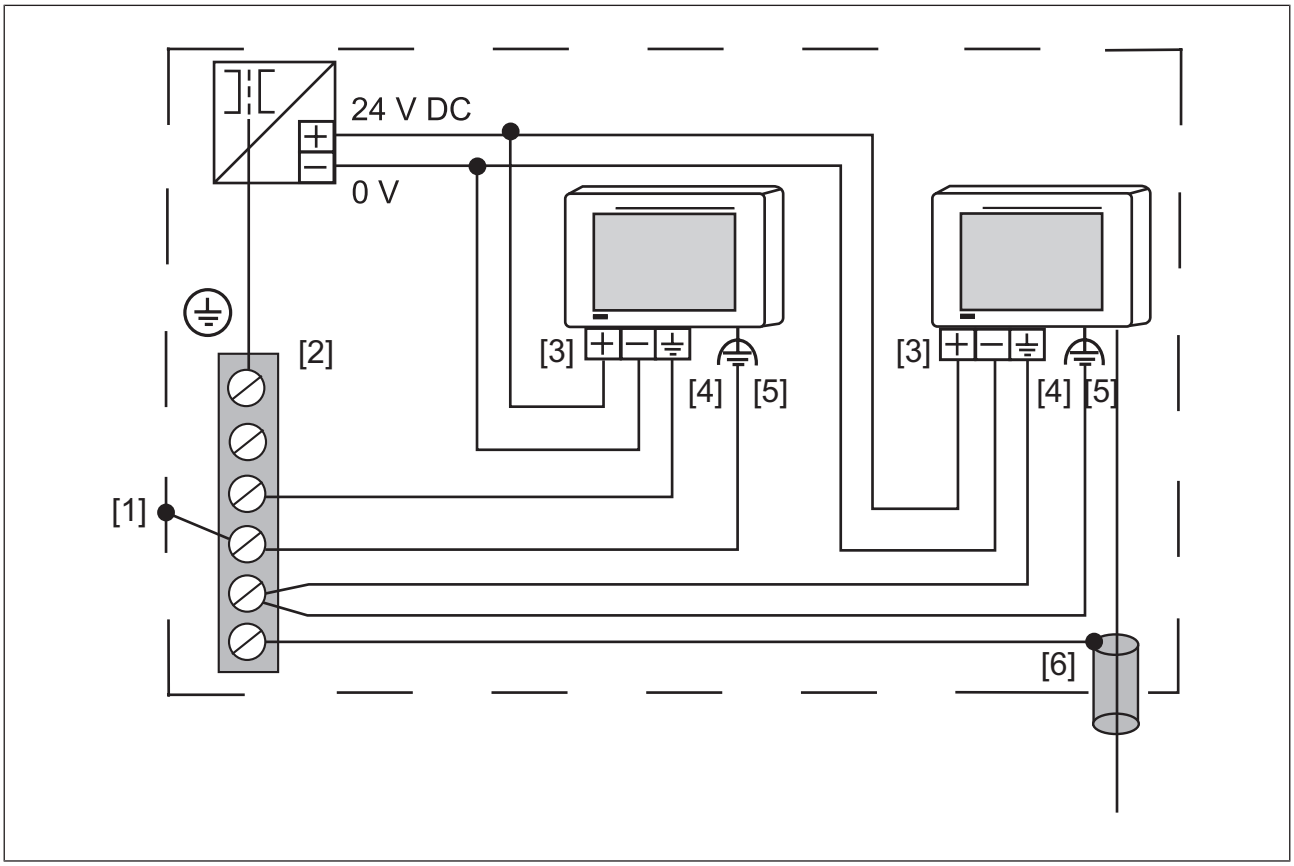

Fig.: Connection example

Legend

[1] Earth star point of the unit or control cabinet

[2] Earth bus bar

[3] Supply voltage

[4] Functional earthing terminal (electronic)

[5] Functional earthing bolts (housing)

[6] Data line shield

0 V and ⏚ are connected internally.

6.4 Interfaces

Connect X7 and X7 fieldbus to the fieldbus junction cable.

6.4.1 Overview

Four RJ45 sockets with interfaces are available on the top of the device.

Socket X7-X10	Connector	Description
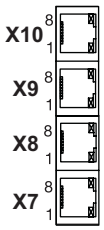	X10	Reserved
	X9	EtherCAT interface
	X8	Ethernet interface
	X7	1 CANopen/ 1 PROFIBUS DP interface (Connection via fieldbus junction box)

Socket assignment

6.4.2 CANopen, PROFIBUS DP

X7 has been assigned a combined CANopen/PROFIBUS DP interface.

6.4.2.1 Wiring guidelines for the CANopen interface

The CAN network is designed in a linear structure.

- The overall line length and the length of the stub lines depend on the transmission rate and on the cable properties (cable resistance and cable capacitance).
- The signal lines must be terminated with resistors on the first and last subscriber.
- A characteristic impedance of 120 Ohm is acceptable for bus lengths up to 40 m.

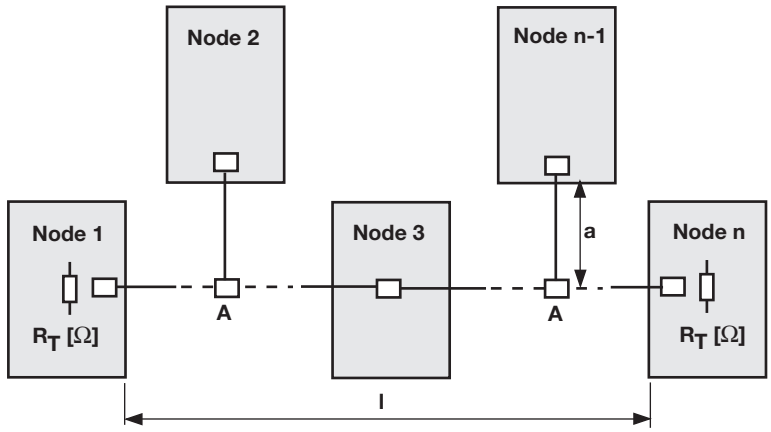

Fig.: Overall length and length of the stub lines on a CAN network.

Legend:

- Node: CANopen subscriber
- a: Length of stub line
- A: Branch
- R_T: Terminating resistor

Relationship between transmission rate, bus length and length of stub lines:

Transmission rate [kBit/s]	Bus length l [m]	Length of stub line a [m]	Overall length of all stub lines [m]
1000	10	1.5	7.5
500	70	5.5	27.5
250	115	11	55

The following table provides an approximate overview of the size of the terminating resistor R_T with different cable lengths. In each specific case, details of the characteristic impedance can be found in the cable specification.

Bus length l [m]	Terminating resistor R_T [Ohm]
0 - 40	120
40 - 300	150 - 300
300 - 500	150 - 300

INFORMATION

Please also refer to the installation guidelines published by the CANopen User Group.

6.4.2.2 CANopen/PROFIBUS DP interface

The PROFIBUS and CANopen interface are on the same socket. The PROFIBUS and CANopen interface use the same operating earth (GND).

Socket X7	Pin	Designation	Description
8 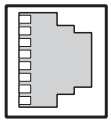 1	1	CNTR-P (RTS)	PROFIBUS RTS
	2	n. c.	n. c.
	3	GND	Ground
	4	RxD/TxD-N	PROFIBUS A cable
	5	RxD/TxD-P	PROFIBUS B cable
	6	GND	Ground
	7	CAN_H	CAN high signal
	8	CAN_L	CAN low signal
	n.c. = not connected		
	1 CANopen/ 1 PROFIBUS DP interface Connection via fieldbus junction box		

INFORMATION

Please also refer to the installation guidelines published by the PROFIBUS User Group.

6.4.3 Ethernet

Socket X8	Pin	Designation	Description
8 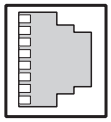 1	1	D1+	TX D1+
	2	D1-	TX D1-
	3	D2+	RX D2+
	4	D3+	BI D3+
	5	D3-	BI D3-
	6	D2-	RX D2-
	7	D4+	BI D4+
	8	D4-	BI D4-

The Ethernet interface is compatible with 1000Base-T (Standard Gigabit Ethernet)

Recommended cable: Cat 5e SF/UTP

6.4.4 EtherCAT

Socket X9	Pin	Designation	Description
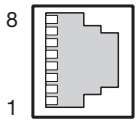	1	TD+	Transmit +
	2	TD-	Transmit -
	3	RD+	Receive +
	4	n. c.	
	5	n. c.	
	6	RD-	Receive -
	7	n. c.	
	8	n. c.	
	n. c. = not connected		

6.4.5 RS232 interface (COM1)

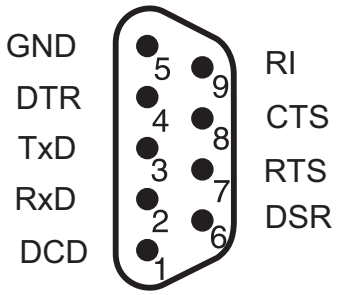

7 Commissioning

Procedure after power-up

There may be a delay of up to 60 seconds between power-up and the device being ready for operation. The motion control software is preinstalled and it starts automatically. Before using it for the first time, adapt the IP address via the setup (see Activating setup [📖 31]).

7.1 Safety guidelines

Please note the following safety guidelines during commissioning:

- When commissioning, you must ensure that the control systems do not present a risk to persons, plant or machinery. Appropriate protection and precautionary measures must be put in place.
- To avoid personal injury and material damage, only qualified, trained personnel should work on the devices. Qualified technical staff are those who are familiar with the transport, installation, commissioning, maintenance and operation of the device. They will be familiar with the relevant standards and regulations.
- Prior to commissioning the machine manufacturer must produce a hazard analysis for the machine and take appropriate measures to ensure that unexpected movements do not cause injury to people or damage to equipment.
- Only specialist staff with extensive knowledge of drive technology and control engineering should be permitted to program a running drive online.
- Data stored on data media is not protected from unintended changes by third parties. Data must be checked for accuracy before it is downloaded to the control system.
- Prior to installation and commissioning, information in this operating manual, and in particular the safety guidelines, must be carefully read and considered (see Chapter entitled “Safety”). Personal injury and material damage may result if devices are handled incorrectly.
- It is essential to comply with the technical details and specifications (type label and documentation).

7.2 Activating setup

When starting the device, click on ***Setup***. The SD card supplied on which the PMI Assistant is installed must be connected to do this. When the SD card is not connected, the Control Panel is started.

The PMI Assistant is a graphics software tool and is used for simple installation and configuration of common, pre-defined application packages on the PMI.

Further information on the PMI Assistant can be found in the "PMI Assistant Operating Manual".

7.3 Commissioning motion control software

7.3.1 Preparing for commissioning

PASmotion

Install the commissioning software PASmotion. The software is available on www.pilz.com.

Establish the following connections:

- Connect X7 on the PMI 6 primo to "Fieldbus X7" on the fieldbus junction box using the supplied RJ45 cable.
- Connect Ethernet interface X8 of PMI 6 primo to the PC.

Apply the supply voltages

- Switch on the supply voltage for the PMI 6 primo.

The device starts. The PMI 6 primo browses the network for subscribers.

Logical axes are automatically assigned to the servo amplifiers by the motion control software if

- No configuration is stored in the motion control software.
- New servo amplifiers are detected in the existing configuration.

7.3.2 Create communication PMI 6 primo with PC

The following steps describe how to establish a connection between the PC and PMI 6 primo via the Ethernet interface.

Prerequisite:

- The commissioning software PASmotion is installed on the PC.
- The supply voltage (24 V DC) is present at PMI 6 primo.
- The configuration PC must be connected to the Ethernet interface X8 on the PMI 6 primo.

Establish connection

1. Start the commissioning software PASmotion.
2. Select the ***Terminal*** window.
3. Click on the icon  - ***Create New Connection***.

   The ***Connection Settings*** window opens.

You can now connect to a known network subscriber. If you do not know the IP address, you can browse the network for subscribers.

Alternative 1: The IP settings are known

- Prerequisite: The PMI 6 primo and PC must be in the same network or be accessible via a Router.

1. Select ***Ethernet***.

   The ***New Connection*** window opens.
2. Enter the ***IP address*** in the connection settings and select ***Finish***.

   The connection to the PMI 6 primo is established.

Alternative 2: The IP settings are unknown

- Prerequisite: The PMI 6 primo and the PC are in the same broadcast domain.

1. Select ***Ethernet***.
2. Click on ***Network scan***.
3. Select the required network adapter.
4. Click on ***Scan***.
5. From the list, select the subscriber to which you wish to connect.

   Note: Click on ***Ping*** to identify the device's hardware.
6. Select ***Configuration…*** The ***Device Configuration*** window opens.
7. Enter the IP settings and then select ***Use this IP address***. The ***Connection Wizard*** window opens.
8. Select ***Finish***.

   The network subscriber is connected.

The motion control software reports on the configuration, once the Ethernet connection has been established.

```
S T A R T

SOFTWARE
          Firmware:          03.05.00.00, Mar 22 2018, 15:54:00
          Motion:            INSTALLED
          IEC PLC:           INSTALLED
          Interpolation:     INSTALLED

ETHERNET
          IP ad-             192.168.0.11
          dress
          Netmask            255.255.255.0
          Gateway            192.168.0.1

CHANNELS
          Number             1..
                             .12

HARDWARE
          Type:              PMIprimo  1300MHz         unknown
          Item No.:          265613
          Ser. No.:          100033
          Pr. Ver.:          1.0
          Encoder            0
          Inputs:            0
```

```
            Outputs:            0
            Virtual inputs:     56
            Virtual outputs:    56
            Analogue Inputs:    0
            Analogue Outputs:   0
DEVICES in SafetyNET p RTFL Network:
            PMCprotego D (S706) at SafetyNET p RTFL ADDR 51 found
            (DS402)
                      Inputs:       5
                      Outputs:      1
                      Virtual in-   17
                      puts:
                      Virtual out-  19
                      puts:
                      Analogue In-  2              inputs linked to
                      puts:                        channel from 0.1 to
                                                   0.2

DEVICES in CAN Network:
            PMCtendo DD4 (SD01) at CAN4 ADDR 6 found (DS402)
                      Inputs:       2
                      Outputs:      0
0.1: hw2
0.1:
STATE OF DEVICES:
            Device      Network    Addr  CH   FS  VN          State
-------------------------------------------------------------------------------------------------------------
            Device
            PMCprimo C  ---        ---   ---  --- 03.05.00.00 ACTIVE
            PMCprotego  CAN1       13    2    2   27 5.180    FAULT
            DD4
            PMCprot-    SNET       51    ---  27  5.323       ACTIVE
            ego D
0.1:
```

The motion control software is ready for operation. It reports with the command prompt 0.1:.
Key:

Charac-ter	Meaning	Details
0	Address of the controller (always 0 on PMI 6 primo)	
.	Decimal point	
1	Number of current axis	

Charac-ter	Meaning	Details	
:	Status indicator of current axis	>	Control loop closed
		:	Control loop open
		A	Axis executes alignment movement
		C	Axis executes coupling process
		I	Initialisation running
		M	Axis executes positioning
		S	Axis executes stop command
		V	Axis is in speed control
		W	Axis is in standby
		X	Position assignment is active on the axis

7.3.3 Adapt the base configuration of the motion control software

The basic configuration of the motion control software can be amended in the terminal program using the "CD" command.

```
0.1: cd
0.1:
A C T U A L C O N F I G U R A T I O N:
---      Project Info PLC   --------------------
---      Date of Project:   2018-03-27
---      Project:           BasicProject-PMIprimo_C3_V3-5-12_2018_03_22
---      Title:             BasicProject-PMIprimo_C3_V3-5-12_2018_03_22
---      Version:           2017.8.18
---      Author:            RF / PD
---      Description:
CODESYS Version: >= 3.5.9.5
Compiler 3.5.9.5
Visualisation: 3.5.9.6
Firmwareversions:
PMCprimoC/MC: >= 3.3.01
PMCprotego/tendoDD5: >= 6.11
------------------------------------------------------------
Operate Mode:           STANDALONE
(24) Cycle Time:        1000 µs
( 4) Actual IP address: 192.168.0.11
( 4) Actual Netmask:    255.255.255.0
( 4) Actual Gateway:    192.168.0.1
```

```
(12) Number of Chan-    12
nels:
(13) Change System-     20-02-2015 18:52:20
time:
(25) SafetyNET p RTFL   1000 µs
Cycle time:
( 9) CAN node address   50
( 3) CAN1 baudrate:     1000 KBit
( 8) CAN1 cycle time:   2 ms
(16) Startup delay:     0 s
(22) CAN-mode:          CAN1: Master
(26) PMCprotego with    automatic
SD-Card:
(35) Codesys:           Version 3
(36) No CAN reserved
for Codesys
(11) PROFIBUS Address:  25
( 5) PROFIBUS IN/OUT    20 (words)
Length:
( 6) PROFIBUS Offset:   0
(28) Modbus Client      not active
*********************************************************

             0:   Exit menu
             2:   Delete application data
             3:   Change CAN1 baudrate
             4:   Change Ethernet
             5:   Change in/out length for Profibus
             6:   Change offset for Profibus
             8:   Set CAN1 Cycle time
             9:   Set CAN address
             11:  Change Profibus address
             12:  Change number of channels
             16   Change startup delay
             22:  Enable slave mode for CAN
             24:  Change cycle time of system
             25:  Set SafetyNET p RTFL Cycle time
             26:  Set address for PMCprotego with SD-Card
             28:  Set number of ModbusClient
             29:  Change ModbusClient Parameter
             35:  Set Codesys Version
             36:  Reserve CAN for Codesys
             Choice [Return; ESC exits menu]:
```

Once you exit the menu the basic configuration is active and saved, if changes have been made. It may be necessary to reboot the PMI 6 primo for the changes to take effect.

7.3.4 Configure servo amplifier

Parameters for the servo amplifiers available in the network can be set using the commissioning software PASmotion.

Please note the following prerequisites:

- The servo amplifier must not be enabled (ENABLE = 0).
- The mains voltage for the servo amplifier's power element must be switched off.
- The 24 VDC supply voltage for the servo amplifier's control element must be present.
- The CANopen network is configured for the motion control software and the servo amplifier

Further information is available in the operating instructions for the servo amplifier.

7.3.5 Operate motion control software

You can operate the motion control software in the commissioning software terminal by issuing commands in the command language.
Further information on the command language can be found in the PMCprimo C programming manual.

HW1 - Show Hardware

```
0.1: hw1
0.1:
SOFTWARE
    Firmware:      03.05.00.00, Mar 22 2018, 15:54:00
    Motion:        INSTALLED
    IEC PLC:       INSTALLED
    Interpolation: INSTALLED

ETHERNET
    IP address     192.168.0.11
    Netmask        255.255.255.0
    Gateway        192.168.0.1

CHANNELS
    Number         1...12

HARDWARE
    Type:          PMIprimo 1300MHz unknown
    Item No.:      265613
    Ser. No.:      100033
    Pr. Ver.:      1.0
    Encoder:       0
```

```
    Inputs:        0
    Outputs:       0
    Virtual in-    56
    puts:
    Virtual out-   56
    puts:
    Analogue In-   0
    puts:
    Analogue Out-  0
    puts:

DEVICES in CAN Network:
    PNOZmulti (DS401) at CAN1 ADDR 14 found.
    Inputs:        24
    Outputs:       24

    CAN-I/O (DS401) at CAN1 ADDR 23 found: PSSuniversal
    Inputs:        32
    Outputs:       32
    Analogue In-   2 inputs linked to channel from 0.1 to 0.2
    puts:
    Analogue Out-  2 outputs linked to channel from 0.1 to 0.2
    puts:

    PMCtendo DD4 (SD01) at CAN1 ADDR 13 found (DS402)
    Inputs:        2
    Outputs:       0
DEVICES in SafetyNET p RTFL Network:
    PMCprotego D (S706) at SafetyNET p RTFL ADDR 51 found (DS402)
    Inputs:        5
    Outputs:       1
    Virtual in-    17
    puts:
    Virtual out-   19
    puts:
    Analogue In-   2 inputs linked to channel from 0.1 to 0.2
    puts:
DEVICES in EtherCAT Network:
No EtherCAT device found (919)
```

HW2 - Show Hardware State

```
0.1: hw2
0.1:
```

```
STATE OF DEVICES:
    Device              Network     Addr     CH      FS     VN             State
-------------------------------------------------------------------------------
    Device
    PMCprimo C          ---         ---      ---     ---    03.05.00.00    ACTIVE
    PNOZmulti           CAN1        14       ---     ---    ---            ACTIVE
    CAN-I/O             CAN1        23       ---     ---    ---            FAULT
    PMCtendo DD4        CAN1        13       2       2      27 5.180       FAULT
    PMCprotego D        SNET        51       ---     27     5.323          ACTIVE
0.1:
```

7.4 Install CODESYS

The development environment for programming in accordance with IEC 61131-3 CODESYS can be found in the software package "PMC Programming Tool". The software package is available on the Internet at www.pilz.de.

- Select the ***CODESYS*** menu.

  Installation will start. Follow the instructions.

The following components are installed:

- PMIprimo Target Packages
- Primo.dll

  This library combines CODESYS with the software tools, enabling curves (PMotion) and parameters for the servo amplifier and motors to be edited.
- Primo base project

  The base project can be found in the CODESYS directory under Projects\primo.

Further information on CODESYS and the available function blocks can be found in the CODESYS online help.

INFORMATION

The "PMC Programming Tool" for IEC 61131-3 programming contains the CODESYS Version 3.5.

7.5 Control Panel

All system settings can be made via the Control Panel in Windows Embedded Compact 7. Special features and device-specific settings are described in the following!

7.5.1 Backup and Restore

Program which you can use to save or restore an entire directory structure. System settings will not be saved.

7.5.2 Password settings

Passwords

Assign a password for the control panel to protect the settings in this area. Two levels can be protected with different passwords.

Level 1: Master control panel password
The whole control panel can be protected with a password.

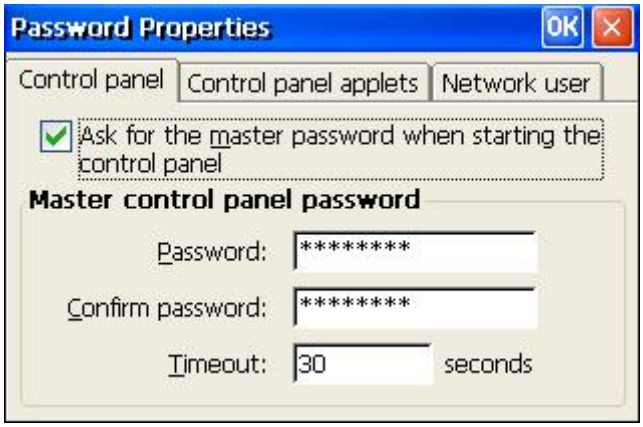

Defining a password: Enter a password. Enter the password again in the "Confirm password" field.
Changing a password: Same as for defining a password
Delete password: Deselect *Ask for the master password ….*

If you select *Ask for the master password ...*, then the system will request that the master password is entered before the control panel opens.

Timeout
If an incorrect password is entered three times or no valid password is entered within the selected time, then the Control Panel is closed.

Level 2: Control panel applets

Individual Control Panel "applets" can be protected with a password.

Add

Add Control Panel "applets" to the password protected area. This area is protected with a password.

Remove

Remove Control Panel "applets" from the password protected area. This area is not protected with a password.

INFORMATION

Add **Password Settings** to the password protected area, otherwise the password you enter will be unprotected and can be changed.

Level 3: Network user

Access to the network servers is controlled by a central user.

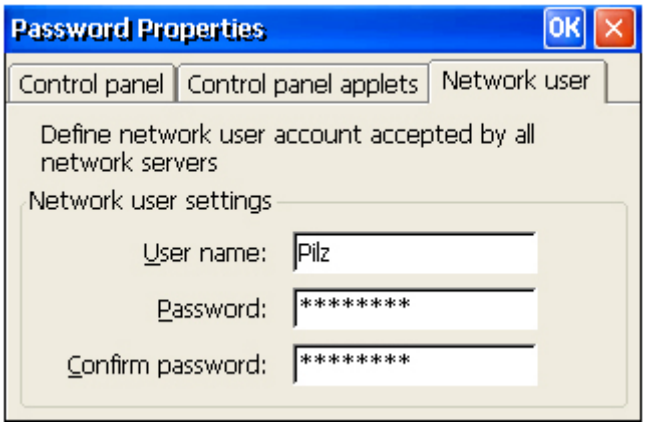

To change the default settings, follow the instructions below:

User name: Enter a user name
Password: Enter a password for the network user
Confirm password: Enter the new password again

INFORMATION

The factory-set default for the network user is:
User name: Pilz
Password: png

7.5.3 Date/time

Setting the date, time, time zone and winter/summer time

7.5.4 Display

Setting the background image and backlighting

7.5.5 Keyboard & soft keyboard

Keyboard &
Softkeyb...

Setting the keyboard layout (German or English) and setting the soft keyboard (small, large or no keyboard)

7.5.6 Regional settings

Regional
Settings

Regional settings (number format, currency, time, date)

7.5.7 Storage Manager

Storage
Manager

Format/partition memory

7.5.8 System

System

Display/modify system properties (relationship between program memory/file management)

7.5.9 Edit PMI Start

Edit
PMIStart

Edit or create the batch file PMI-Start.cmd

7.5.10 Taskbar and desktop

Taskbar &
Desktop

Set taskbar properties and show/hide desktop icons

7.5.11 Network servers

Start and stop various services (Telnet, SMB, FTP, SNTP, Web Server)

The servers are deactivated in their delivery condition and they are not required for operate the PMI 6 primo. Activating individual services can mean a security risk. It is mandatory to assign a password.
The motion control software offers functions to change the password and for temporarily activating the services FTP and Telnet, which should be preferred (see also PMCprimo C Programming Manual).

7.5.12 Internet options

Internet Explorer settings

7.6 Start behaviour

7.6.1 Automatically copy to system folder (\windows)

A folder can be created in*BOOT\Windows*\ to add additional libraries or fonts (TTF) to the system. All files and directories are copied to the system folder *Windows* on start-up. Fonts (TTF) in the folder *BOOT\Windows\Fonts*\ are also registered.

Tip: Memory-intensive fonts should be installed on the external **Storage Card** using *fontreg* (see Windows CE Shell commands - Pilz expansions [📖 64]).

7.6.2 Batch file PMIStart.cmd

PMIStart.cmd is a CE Shell command batch file, which is executed sequentially after booting. Commands can be found under Windows CE Shell commands [📖 63] and Windows CE Shell commands - Pilz expansions [📖 64]. The batch file PMIStart.cmd can be found in the directories *Hard Disk*, *Storage Card* and *BOOT*.
If the batch file exists in one of the above directories, then it is executed once, i.e. if the batch file exists in all three directories, only *Hard Disk\PmiStart.cmd* will be executed and not the other two batch files. The sequence is as follows: *Hard Disk,* *Storage Card* and finally *BOOT.*

7.6.3 Running services

All network services (FTP, Telnet, HTTP, SMB, SNTP) are switched off on start-up (see Network servers [📖 45]).
The servers are deactivated in their delivery condition and they are not required for operate the PMI 6 primo. Activating individual services can mean a security risk. It is mandatory to assign a password.
The motion control software offers functions to change the password and for temporarily activating the services FTP and Telnet, which should be preferred (see also PMCprimo C Programming Manual).

7.6.4 Network settings

The format of the IP address is 192.168.0.11.

7.6.5 Various basic settings

- Regional settings: English (currency, date, time, numbers)
- User input language: English (fixed)
- Input language: English (keyboard) (see Regional settings [📖 44])
- Network:
  - User: pilz
  - Password: png (see Password settings [📖 41])
- Network device name: PMI6xx (see System [📖 44])

8 Operation

8.1 Operating states and changes in operating status

8.1.1 Status graph

The following status graph shows the operating states and changes in operating status. The priority of a transition is indicated by a number in a small square in the middle of the transition arrow. The operating states and changes in operating status are described in detail below.

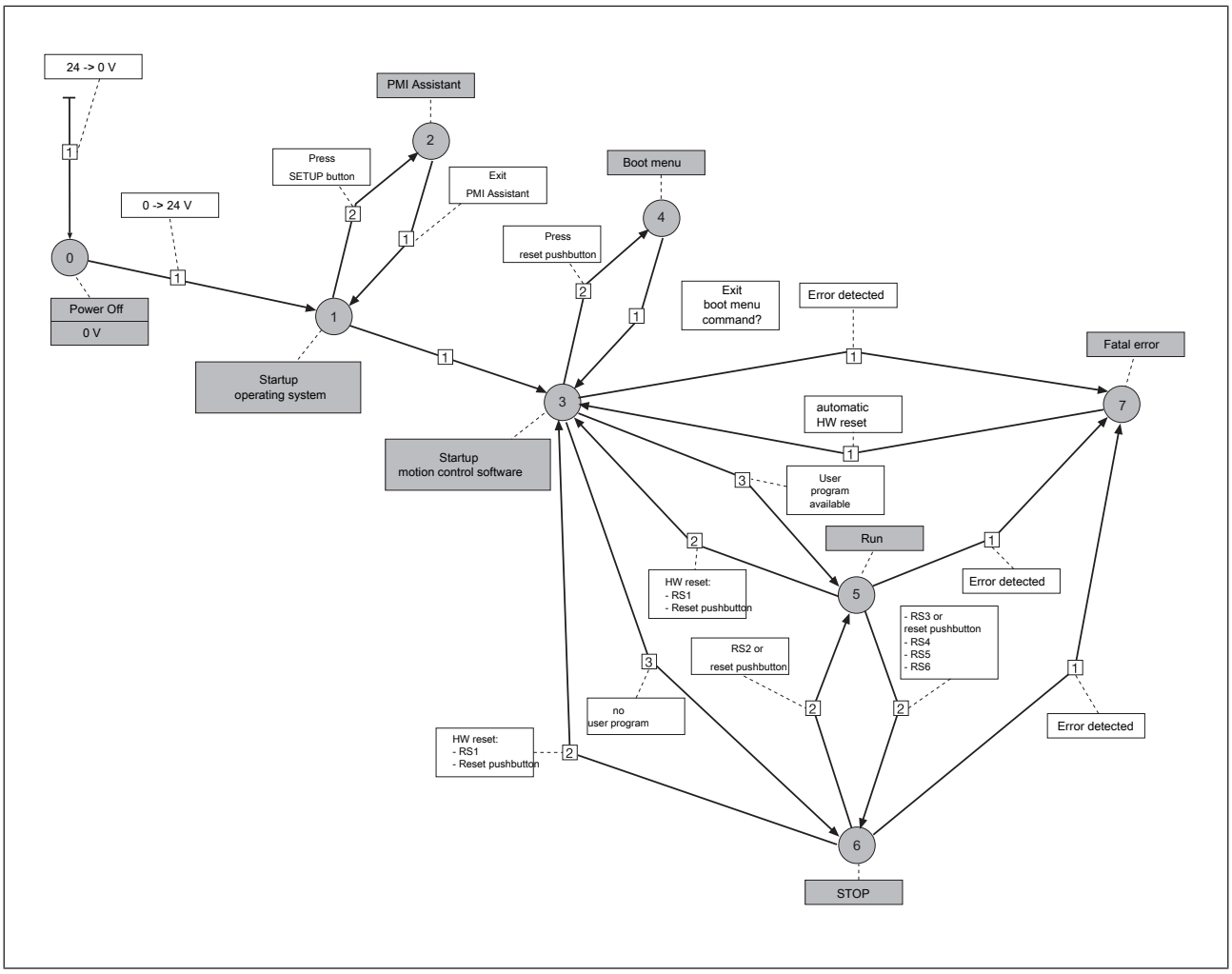

Fig.: Operating status and changes in operating status of the motion control software

8.1.2 Operating states

8.1.2.1 "Power Off" operating status

In the operating status "Power Off" the PMI 6 primo is voltage-free. By switching on the supply voltage, the system changes to the "Startup Operating System" operating status.

8.1.2.2 "Startup Operating System" operating status

The following steps are performed in the "Startup Operating System" operating status:

- Initialise hardware
- Load operating system

If no errors are detected during "Startup Operating System", the controller will change to the operating status "Startup Motion Control Software".
Switch to the configuration tool "PMI Assistant":

- While the operating system is loaded, a "SETUP" button is displayed for 5 seconds. Click on this button to start the PMI Assistant.

8.1.2.3 "PMI Assistant" operating status

In the "PMI Assistant" operating status a basic configuration of the device can be performed, e.g.:

- Configuration of the IP address
- Configuration of the PVIS OPC UA Server

8.1.2.4 "Startup Motion Control Software" operating status

The following steps are performed in the "Startup Motion Control Software" operating status:

- Initialise fieldbus interfaces
- Load user program

If no errors are detected during "Startup Motion Control Software" the controller changes to

- "RUN" operating status, if a user program has been loaded.
- "STOP" operating status, if **no** user program has been loaded.

Status of LED:

- LED flashes rapidly.
- The LED lights for 4 s continuously after "Startup" operating status has been run. During this time it's possible to change to "Boot Menu" operating status.

Change to "Boot Menu":

- Press the reset pushbutton while the LED is lit continuously.

8.1.2.5 "Boot Menu" operating status

In the "Boot Menu" operating status, the operating parameters for the motion control software can be configured in the command language in the terminal program using the CD command, e.g.

- Configure the interfaces
- Delete the user program

Prerequisite:

- The PC and PMI 6 primo are connected via the Ethernet interface.

Status of LED:

- The LED is lit continuously.

8.1.2.6 "RUN" operating status

In "RUN" operating status

- All system sections are in a RUN condition and are operating without error.
- A PLC user program is run as part of each cycle.
- It is possible to communicate with the motion control software in the terminal program via the command language.

Status of LED:

- The LED flashes slowly.

8.1.2.7 "STOP" operating status

In "STOP" operating status

- No user program is run.
- The system is operating without error.
- It is possible to communicate with the motion control software in the terminal program via the command language.

Status of LED:

- The LED is lit continuously.

8.1.2.8 "Fatal Error" operating status

"Fatal Error" operating status is reached when an error occurs.

- The function is disrupted long-term. The operating status is adopted temporarily.
- The motion control software automatically changes back to the operating status "Startup Motion Control Software".
- The error is entered in the error stack.

Status of LED:

- The LED is switched off.

8.1.3 Change in operating status

--> 0 **Change of all operating states change to "Power Off"**

The system changes to "Power Off" operating status when the 24 VDC supply voltage has been switched off.

0 --> 1 **Change from "Power Off" to "Startup Operating System"**

The system changes to "Startup Operating System" operating status when the 24 VDC supply voltage has been switched on.

1 --> 2 **Change from "Startup Operating System" to "PMI Assistant"**

The "STAT" LED flashes green for 5 s, if the "Startup Operating System" operating status has been run without error.

- Press the SETUP button during this time to change to "PMI Assistant" operating status.

2 --> 1 **Change from "PMI Assistant" to "Startup Operating System"**

The system changes to "Startup Operating System" operating status if the "PMI Assistant" is terminated.

1 --> 3 **Start of motion control software**

After starting the operating system, the motion control software is started automatically.

3 --> 4 **Change from "Startup Motion Control Software" to "Boot Menu"**

The LED flashes for 4 s, if the "Startup Motion Control Software" operating status has been run without error.

- Press the reset pushbutton during this time to change to "Boot Menu" operating status.

3 --> 5 **Change from "Startup Motion Control Software" to "RUN"**

"Startup Motion Control Software" operating status has been run without error. The system changes to "RUN" status if a user program was loaded in "Startup Motion Control Software" operating status.

3 --> 6 **Change from "Startup Motion Control Software" to "STOP"**

"Startup Motion Control Software" operating status has been run without error. The system changes to "STOP" operating status if **no** user program was loaded in "Startup Motion Control Software" operating status.

3 --> 7 **Change from "Startup Motion Control Software" to "Fatal Error"**

The system changes to "Fatal Error" status if an error occurred in "Startup Motion Control Software" operating status.

4 --> 3 **Change from "Boot Menu" to "Startup Motion Control Software"**

The system changes to "Startup Motion Control Software" operating status if the "Boot Menu" in the terminal program is exited using the command O or ESC.

5 --> 3 **Change from "RUN" to "Startup Motion Control Software"**

The system performs a hardware reset after

- Running the command RS1 in the terminal program (cold start).
- Holding down the reset pushbutton for a long period (> 4 s) (alternative to RS1 command).

5 --> 6 **Change from "RUN" to "STOP"**

The system performs a status change after

- Running the following commands in the terminal program:
  - RS3 (change to "STOP")
  - RS4 (warm reset), stops the user program
  - RS5 (cold reset), stops the user program
  - RS6 (original reset), deletes the user program
- Running commands in the IEC 61131 development environment.
- Holding down the reset pushbutton for a short period (< 4 s) (alternative to RS3 command, change to "STOP").

5 --> 7 **Change from "RUN" to "Fatal Error"**

The system changes to "Fatal Error" operating status if an error occurred in "RUN" status.

Remedy:

- Delete user program
- Firmware update

6 --> 3 **Change from "STOP" to "Startup Motion Control Software"**

The system performs a hardware reset after

- Running the command RS1 in the terminal program (cold start).
- Holding down the reset pushbutton for a long period (> 4 s) (alternative to RS1 command (cold start)).

6 --> 5 **Change from "STOP" to "RUN"**

The system performs a status change after

- Running the command RS2 in the terminal program (change to "RUN").
- Running commands in the IEC 61131 development environment:
- Holding down the reset pushbutton for a short period (< 4 s) (alternative to RS2 command (change to "RUN")).

6 --> 7 **Change from "STOP" to "Fatal Error"**

The system changes to "Fatal Error" operating status if an error occurred in "STOP" status.

Remedy:

- Delete user program
- Firmware update

7 --> 3 **Change from "Fatal Error" to "Startup Motion Control Software"**

"Fatal Error" operating status is only adopted temporarily after an error has occurred. The motion control software automatically changes to "Startup Motion Control Software" operating status.

The error is entered in the error stack.

8.2 Reset, restart, start and stop options

8.2.1 Overview

Various options are available to specifically stop or start the motion control software, for operation or commissioning for example. The implications of intervening depend on the specific command that is used.

Options	Action	Command language	IEC 61131 programming
Cold start of PMI 6 primo	Cold start (HW reset)	RS1 (alternative: Hold down reset pushbutton for long period (> 4 s))	
Stop user program	Stop	RS3 (alternative: Hold down reset pushbutton for short period (< 4 s))	Online --> Stop
Start user program	Start	RS2 (alternative: Hold down reset pushbutton for short period (< 4 s))	Online --> Start
Reset motion control software	Cold reset	RS5	Online --> Reset (cold)
	Warm reset	RS4	Online --> Reset
	Original reset	RS6	Online --> Reset (original)

The following table provides an overview of the impact of a reset, start or stop on a variable.

Action	Variable with attribute RETAIN	Variable with attribute PERSISTENT	Variable with attribute RETAIN PERSISTENT
Warm reset	x	-	x
Cold reset	-	-	-
Original reset	-	-	-

x = Value is retained, - = Value is re-initialised

8.2.2 Cold start, "Startup"

A complete cold start of the system can be performed as follows:

- Switch the 24 VDC supply voltage to PMI 6 primo off and then on again.
- After starting the operating system, the motion control software is started again in the "Startup" operating status.

8.2.3 Reset commands

8.2.3.1 Warm reset

This command

- Stops the user program.
- Resets all variables to the value with which they were initialised (exception: variable with attribute RETAIN).
- Resets all variables that have not been explicitly initialised to a default initialisation value.

Commands:

- Command language: RS4
- IEC 61131 programming: Menu ***Online -> Reset***

8.2.3.2 Cold reset

This command

- Stops the user program.
- Resets all variables to the value with which they were initialised.

Commands:

- Command language: RS5
- IEC 61131 programming: Menu ***Online -> Reset (cold)***

8.2.3.3 Original Reset

This command

- Deletes the user program.
- Resets all variables to the value with which they were initialised (including remanent variables with attribute RETAIN and PERSISTENT).
- Resets the motion control software to its original condition (factory default settings).

Commands:

- Command language: RS6
- IEC 61131 programming: Menu ***Online -> Reset (original)***

8.2.4 Start and stop commands

The user program can be started and stopped via commands in command language or in the IEC 61131 development environment. Start and stop commands are used to change between the operating states "RUN" and "STOP".

Stopping the user program

The stop command

- Changes the controller's operating status from "RUN" to "STOP".
- Stops the user program.

Commands:

- Command language: RS3
- IEC 61131 programming: Menu ***Online -> Stop***
- Hold down reset pushbutton for short period (< 4 s)

Starting the user program

The start command

- Changes the controller's operating status from "STOP" to "RUN".
- Starts the user program.

Commands:

- Command language: RS2
- IEC 61131 programming: Menu ***Online -> Start***
- Hold down reset pushbutton for short period (< 4 s)

8.3 Functions of the reset button

The "RESET" pushbutton is mounted in a recess on the front of the device. It can only be accessed using an appropriate tool (e.g. a pin).

The following actions can be triggered by pressing the "RESET" pushbutton:

- Change from "Startup" operating status to "Boot Menu"
- Hardware reset (cold start): Change from "RUN" or "STOP" operating status to "Startup"
- Change from "RUN" operating status to "STOP"
- Change from "STOP" operating status to "RUN"
- A USB stick must be inserted: the data stored on the USB stick is copied to the controller. The data can contain a new firmware with a complete project.

Change from "Startup" operating status to "Boot Menu"

After cold starting the motion control software you can change to the "Boot Menu" in order to set the operating parameters.

Proceed as follows:

- The motion control software is in "Startup" operating status. LED flashes rapidly.
- The LED lights for 4 s continuously after "Startup" operating status has been run. During this time it's possible to change to "Boot Menu" operating status.
- Press the reset pushbutton while the LED is lit continuously.
- The controller changes to "Boot Menu".

Hardware reset (cold start)

A hardware reset can be triggered in "RUN" or "STOP" operating status. The motion control software changes to "Startup" operating status.

Proceed as follows:

- The controller is in "STOP" or "RUN" operating status.
- Hold the reset pushbutton down for at least 4 s.
- The motion control software changes to "Startup" operating status.

Changing between the operating states "RUN" and "STOP"

You can change between the operating states "RUN" and "STOP".

- Briefly press the reset pushbutton to change from "RUN" to "STOP" or from "STOP" to "RUN".

8.4 Messages

The motion control software provides many options for diagnostics, fault detection and communication with other controllers.

Diagnostics can be performed via

- The LEDs on the top of the device.
- The error stack.
- PVIS expanded diagnostics.
- Display commands.
- Recording of process data.

LEDs

LEDs on the top of the device provide information on the operating status (see section on "Display elements" in this chapter).

Error stack

The error stack contains the last 100 error messages. It can be read in the operating status "RUN" and "STOP".

- Select the LE1 command in the terminal program.

PVIS

Errors, messages and the corresponding remedies are displayed in the expanded diagnostics system PVIS.

Display commands

Display commands for recording process data are axis-related. They are used to display motion control data, e.g. position, speed, tracking distance. Display commands can be executed in the operating status "RUN" and "STOP".

- To start display mode, select the DM command in the terminal program.
- To end display mode, select the DO command in the terminal program.

Process data

Process data can be recorded in the operating status "RUN" and "STOP" via the

- Motion control software.
- Terminal program.
- Oscilloscope function PScope.

8.5 Display elements

The PMI 6 primo has a "STAT" LED for displaying the operating status.

LED		Meaning	
	STAT	●	Controller is not ready for operation
		Flashes rapidly	Controller is in "Startup" operating status
		Flashes slowly	Controller is in "RUN" operating status
		☼	Controller is in "STOP" or "Boot Menu" status

LED		Meaning	
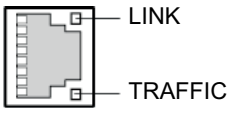 X8, X9, X10	LINK	☼ Green	Network connection
		●	No network connection
	TRAFFIC	Yellow	Data traffic
		●	No data traffic

LED		Meaning	
X7 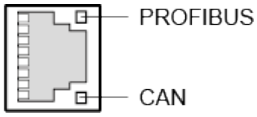	PROFIBUS	☼ Red	No network connection
		●	Network connection is error-free
	CAN	☼ Red	No network connection
		●	Network connection is error-free

- Legend

☼	LED on
●	LED off
	LED flashes

9 Care and maintenance

9.1 Cleaning the touch-screen

Clean the unit's touchscreen at regular intervals. Use a damp cloth to do this.

NOTICE

Make sure the unit is switched off before cleaning it. This prevents you from accidentally triggering functions when you touch the touchscreen.

Cleaning agents

Only use water and washing-up liquid or window cleaner to dampen the cloth. Never use aggressive solvents or abrasive cleaning agents.

10 Attachment

10.1 Supported Windows components

The devices work with the operating system "Microsoft Windows Embedded Compact 7"; the following Windows components are supported:

Applications

- Active Sync (Microsoft Windows Mobile Device Center)
- CAB File Installer/Uninstaller
- WordPad

Application and Service Development

- .NET Compact Framework 3.5
- Active Template Library (ATL)
- C Libraries and Runtimes (except OEM Floating Point CRT)
  - C++ Runtime Support for Exception Handling and Runtime Type Information
  - Full C Runtime
  - Standard IO (STDIO)
  - Standard IOASCII (STDIO)
  - Standard String Functions - ASCII (corestra)
- Component Services (COM)
- Lightweight Directory Access Protocol (LDAP) Client
- Message Queuing (MSMQ)
- OBEX Client
- SOAP Client
- Smart Device
- String Safe Utility Function
- XML - MSXML 3.0
  - XML Core Services and Document Object Model (DOM)
    - XML Query Languages (XQL)
    - XML SAX
  - XML Minimal Parser

Communication Services and Networking

- Connection Manager
  - Connection Manager All Modules
- Networking General
  - Extended DNS Querying and Update (DNSAPI)
  - NDIS Packet Capturing DLL
  - NDIS User-mode I/O Protocol Driver
  - Network Driver Architecture (NDIS)
  - Network Utilities (IPConfig, Ping, Route)
  - TCP/IP

- It includes support for IP, ARP, ICMP, IGMP, TCP, UDP, name resolution and registration, DHCP.
- Windows Networking API/Redirector (SMB/CIFS)
- Winsock Support

- Networking - Local Area Networking (LAN)
  - Wired LAN (802.3, 802.5)
- Networking - Wide Area Networking (WAN)
  - Dial Up Networking (RAS/PPP)
  - Telephony API (TAPI 2.0)
- Servers
  - Core Server Support
  - DHCP Server
  - File Server (SMB/CIFS)
  - FTP Server
  - Simple Network Time Protocol (SNTP)
    - SNTP Client with DST
    - SNTP Server
  - Telnet Server
  - Web Server (HTTPD)
    - Active Server Pages (ASP) Support
    - Web Server Administration ISAPI
    - WEBDAV Support

Core OS Services

- System Event Log
- Debugging Tools
  - Toolhelp API
- Device Manager
- Display Support
- Kernel Functionality
  - Fiber API
  - Format Message API - System Error Messages
  - Memory Mapped Files
  - Message Queue - Point-to-Point
  - Target Control Support (Shell.exe)
- UI based Notification
- Notification LED Support
- Power Management (Full)
- Serial Port Support
- UI Proxy for Kernel-Mode-Drivers
- Windows Embedded CE Driver Development Kit Support Library

File System and Data Store

- Compression
- Database Support (CEDB Database Engine)
  - CEDB Database Engine
  - EDB Database Engine
- File and Database Replication (Bit-based)
- File System - Internal (RAM and ROM File System)
- Registry Storage (Hive-based Registry)
- Storage Manager
  - CD/UDFS File System
  - exFAT File System
  - FAT File System
  - Partition Driver
  - Release Directory File System
  - Storage Manager Control Panel Applet
  - Transaction-Safe FAT File System (TFAT)
- System Password

Fonts

The following fonts are pre-installed in Windows 7 EC:

- Arial
- Comic Sans
- Courier New
- Georgia
- Impact
- Lucida Sans
- Microsoft San Serif
- Segoe UI
- Display
- Tahoma
- Times New Roman
- Trebuchet MS
- Verdana
- Webdings
- Wingdings

INFORMATION

TTF formats can be post-installed (see Automatically copy to system folder (\windows) [📖 45]).

Graphics and multimedia formats

- Graphics
  - Alphablend API (GDI version)
  - DirectDraw
  - Gradient Fill Support
  - Imaging
    - Still Imagine Codec Support (Encode and Decode)
    - Still Image Decoders
      - BMP
      - GIF
      - ICO
      - JPG
      - PNG
      - TIFF
    - Still Image Encoders
      - BMP
      - GIF
      - JPG
      - PNG
      - TIFF
- Windows Codecs

International

- Input Method Manager (IMM)
- Locale Service (National Language Support (NLS))
- Locale Specific Support (English US - US Keyboard)

Internet Client Services

- Browser Application
  - Internet Explorer 7 for Windows Embedded CE - Standard Components
    - Internet Explorer 7 Sample Browser
- Internet Explorer 7 for Windows Embedded CE Components
  - Internet Explorer Browser Control Host
  - Internet Explorer HTML/DHTML API
    - Internet Explorer Plug-in Image Decoder API
      - Internet Explorer PNG Image Decoder
    - Internet Explorer Multi-Language Base API
    - URL Moniker Service
    - Windows Internet Services
    - XML MIME Viewer
  - Internet Option Control Panel
  - Scripting
    - JScript 5.8
      - Script Authoring (Jscript)
    - VBScript 5.8
      - MsgBox and InputBox support

- Script Authoring

Security

- Authentication Services (SSPI)
  - NTLM
  - Schannel (SSL/TLS)
- Credential Manager
- Cryptography Service (CryptoAPI 1.0) with High Encryption Provider
  - Certificates (CryptoAPI 2.0)
  - Diffie-Hellman/DSS Provider
- Cryptography API: Next Generation (CNG) Primitives

Shell and User Interface

- Graphics, Windowing and Events
  - Default Gesture Response
  - Gesture Physic Engine
  - Minimal GDI Configuration
  - Minimal GWES Configuration
  - Minimal Input Configuration
  - Minimal Window Manager Configuration
  - Touch Gesture GWES component
- Shell
  - AYGShell API Set
  - Command Shell
    - Command Processor
    - Console Window
  - Graphical Shell - Standard Shell
- User Interface
  - Common Controls
    - Common Control
  - Common Dialog Support
  - Control Panel Applets
  - Customizeable UI
    - Windows XP-like Sample Skin
  - Mouse
  - Network User Interface
  - Software Input Panel
    - Software-based Input Panel (SIP)
      - SIP for Large Screens
      - SIP for Small Screens
    - Software-based Input Panel Drivers
- Windows Embedded Compact Error Reporting
  - Error Report Generator
  - Error Report Transfer Driver

10.2 Windows CE Shell commands

Shell parameter commands

Command	Description
"/C"	Execute command and exit "Command processor shell".
"/K"	Execute command, "Command processor shell" remains active
"string"	Command that is to be executed

Command line syntax

Command	Description
"COMMAND"	Command name
"OPTIONS"	Command specification
">"	Forward the output text to a file
"2>"	Forward the output fault to a file
">>"	Attach the output text to a file
"2>>"	Attach the output fault to a file
"<"	Reads input text from a file
"&"	Separates a command or several commands
"|"	Separates a command or several commands and sends the output of a command as input for the command that follows
"file1"	Name of the file that includes the output
"file2"	Name of the file that includes the input

List of all possible shell commands

Command	Description
"ATTRIB"	Shows or changes the properties of a file
"CALL"	Calls a batch program from another batch program
"CHDIR, CD"	Shows the name of the current directory or changes the current directory
"CLS"	Deletes the screen
"COPY"	Copies one or several files to a different directory
"DATE"	Shows or sets the date
"DIR"	Shows the files and subdirectories contained in a directory
"ECHO [message] [on| off] "	Shows a message or activates/deactivates the echo
"ERASE, DEL"	Deletes a file or several files
"EXIT"	Exits "command processor shell"
"GOTO"	Causes the "command processor" to jump into a highlighted line in a batch program
"HELP"	Shows a list of available commands

Command	Description
"IF"	Executes conditional processing in a batch program
"MKDIR, MD"	Creates a directory
"MOVE"	Moves files from one directory to another
"net"	Executes network-related operations
"PATH"	Shows or sets a search path for executable files
"PAUSE"	Interrupts the processing of a batch program
"PROMPT"	Changes the prompt for the "command processor"
"PWD"	Prints the current directory path
"REM"	Saves comments to a batch file
"RENAME, REN"	Changes the name of one or several files
"RMDIR, RD"	Deletes a directory
"SET"	Sets or removes an environment variable or shows the values of all environment variables
"SHIFT"	Changes the position of variable parameters in a batch file
"START"	Starts a separate window that executes a certain application or command
"TIME"	Shows the system time or sets it
"TITLE"	Sets the title of the "command processor" window
"TYPE"	Shows the content of a text file or several text files

10.3 Windows CE Shell commands - Pilz expansions

INFORMATION

You can use the command **"/?"** to call up the help. There you will find more information on the individual commands.

Common parameters

Command	Description
"/h"	Shows the help
"/H"	Shows the help
"/?"	Shows the help
"/help"	Shows the help

fontreg

Command for registering additional TTF fonts on the device
Syntax: *fontreg FONTNAME*

Parameter	Description
FONTNAME	Can include placeholders, e. g. *.ttf; when "FONTNAME" is a directory, all the fonts are registered in the directory

format

Command for formatting a removable data medium for use with Windows CE
Syntax: *format <volume> [/Q] [/A size] [/FS <File system>]*

Parameter	Description
/FS	Determines the file system (FAT12, FAT16, FAT32, or exFAT)
/Q	Performs quick formatting
/LLF	Performs formatting with a low formatting rate
/PART	Creates a standard partition after formatting with a low formatting rate
/A	Overwrites the standard sizes of memory allocation
/T	Creates a TFAT format
/Y	Confirmation

kill

Command used to force the completion of a process
Syntax: *kill [EXENAME] /[PID]*

Parameter	Description
EXENAME	Completes the process via the process name (e. g. kill *pnotepad.exe)*
/PID	Completes the process via the PID hexadecimal format (e. g. *kill /fa00ce)*

pnotepad

Command used to start a simple text editor
Syntax: *pnotepad file*

Parameter	Description
file	After starting the text editor a file is opened

ps

Shows all the active processes
Syntax: *ps*

reboot

Command used to restart the device
Syntax: *reboot <sec>*

Parameter	Description
<sec>	Waiting period in seconds before the device is restarted

regedit

Command used to start the registration editor
Syntax: *regedit*

regerase

Command used to delete the present registration of the device; in the next boot process the device will use the default registration
Syntax: *regerase [-r]*

Parameter	Description
-r	Forces a reboot process

regexp

Commend used to export a registration key including subkeys to a file (*.reg)
Syntax: *regexp /r <BaseKey> /f <OutFile> [/c] [ALL]*

Parameter	Description
/r <BaseKey>	Registration key that is to be exported
/f <OutFile>	Name of the target file
/c	Converts REG_MUI_SZ to REG_SZ
/ALL	Parameter used to export the whole registration to a file (*.reg)

regimp

Command used to import a registration file (*.reg)
Syntax: *regimp <InFile> [/temp] [/info]*

Parameter	Description
<InFile>	File name
/temp	Temporarily saved, the present registration is not overwritten
/info	Status information on the success/failure of the action

regsave

Command used to permanently save the current registration
Syntax: *regsave*

regsvrce

Command used to register ActiveX modules (*.ocx, *.dll)
Syntax: *RegsvrCE [/u] [/n] [/s] [/i[:cmdline]] dllname*

Parameter	Description
/u	Deregisters the server
/n	"DllRegisterServer" is not called up, the parameter must be used with "/i"
/s	Suppresses messages on the display
/i <cmdline>	Transmits an optional command line (cmdline) to DllInstall; when "/i" is combined with "/u", DllUninstall is executed
dllname	DLL name

screenshot

Command used to print a screenshot or save it to file
Syntax: screenshot -p <port> -d <devicename> -x <filename> -f <formsize> -o [p]ortrait [l]andscape -q [d]raft, [h]igh -s <scalefactor> -c [c]olor,[m]ono -n <copies>

Parameter	Description
-p <port>	Printer port
-d <devicename>	Printer name
-x <filename>	Save screenshot as a file
-f <formsize>	Paper size (A4, B5, Legal and Letter)
-o [p] / -o [l]	Print orientation portrait / landscape
-q [d] / -q [h]	Print quality draft / high
-s <scalefactor>	Scaling, format: 1.2 (e.g. 0.5, 2.0,..)
-c [c] /- c [m]	Colour (c) / black and white (m)
-n <Copies>	Number of copies

sleep

Command used to insert a waiting time between two operations (sleep mode);
Syntax: *sleep <ms>*

Parameter	Description
<ms>	Waiting time in milliseconds

usrmgr

Command used to manage network subscribers
Syntax: *usrmgr [-a|-d|-l] [<user name> [<password>]] -gn -gd -gl -gm -gat -grf*

Parameter	Description
-a <user name> <password>	Add or update network subscriber
-d <user name>	Remove network subscriber
-l	Show all network subscribers
-gn <group name>	Add new group
-gd <group name>	Delete group
-gl	Show all groups
-gm	Show group members
-gat <group name> <user name>	Add group member
-grf <group name> <user name>	Delete group member

ver

Command used to show information on the device
Syntax: *ver [/d] [/a] [/hw /p /o /l /s /r /c]*

Parameter	Description
/d	Data mode, display without description, e. g.: .. PMI 515 10000007 264515 ..
/a	Show all information
/hw	Outputs the hardware version
/p	Outputs the processor type
/o	Outputs the build version of the operating system
/l	Outputs the bootloader version
/t	Outputs the device type
/s	Outputs the serial number
/r	Outputs the order number
/c	Outputs the chip set version

xcopy

Command used to copy files and directory structures
Syntax: *xcopy [-c | -h | -y <title>] <sourcedir> <targetdir>*

Parameter	Description
-y	Messages are suppressed
-c	Delete target directory first
<SourceDir>	Absolute path of the source directory
<TargetDir>	Absolute path of the target directory

11 Technical details

General	264639	265608	265613
Approvals	CE, EAC (Eurasian), cU-Lus Listed	CE, EAC (Eurasian), cU-Lus Listed	CE, EAC (Eurasian), cU-Lus Listed
Electrical data	**264639**	**265608**	**265613**
Supply voltage			
Voltage	24 V	24 V	24 V
Kind	DC	DC	DC
Voltage tolerance	-15 %/+20 %	-15 %/+20 %	-15 %/+20 %
Output of external power supply (DC)	17,4 W	14,4 W	22,1 W
Display	**264639**	**265608**	**265613**
Display type	TFT	TFT	TFT
Display diagonal	38 cm	18 cm	31 cm
Display resolution	1024 x 768	800 x 480	1280 x 800
Display colour depth	16,2 M	16,2 M	16,2 M
Touchscreen	Resistive	Capacitive	Capacitive
CPU	**264639**	**265608**	**265613**
Processor type	X86	X86	X86
Processor clock speed	1,3 GHz	1,3 GHz	1,3 GHz
Working memory (RAM)	512 MB	512 MB	512 MB
Program memory (Flash)	512 MB	512 MB	512 MB
Real-time clock	yes	yes	yes
Removable data medium	**264639**	**265608**	**265613**
Type	SD card	SD card	SD card
USB interface	**264639**	**265608**	**265613**
Number of USB Hosts	2	2	2
PROFIBUS-DP interface	**264639**	**265608**	**265613**
Number	1	1	1
Station address	0 ... 126d	0 ... 126d	0 ... 126d
Station address selectable via	Software	Software	Software
Maximum data length of PROFIBUS interface			
Input device	244 Byte	244 Byte	244 Byte
Output	244 Byte	244 Byte	244 Byte
Diagnostics	80 Byte	80 Byte	80 Byte
Connection	9-pin D-Sub female connector	9-pin D-Sub female connector	9-pin D-Sub female connector
Log	DPV0	DPV0	DPV0
Operating modes	AutoBaud	AutoBaud	AutoBaud
Description file	Pilz0DCC.gsd	Pilz0DCC.gsd	Pilz0DCC.gsd
Manufacturer’s ID	0DCCh	0DCCh	0DCCh

CANopen interface	264639	265608	265613
Number	1	1	1
Connection type	9-pin D-Sub male connector	9-pin D-Sub male connector	9-pin D-Sub male connector
Device type	Master, Slave	Master, Slave	Master, Slave
Cycle times	1 ms, 2 ms, 4 ms	1 ms, 2 ms, 4 ms	1 ms, 2 ms, 4 ms
Transmission rates	1000 kBit/s, 250 kBit/s, 500 kBit/s	1000 kBit/s, 250 kBit/s, 500 kBit/s	1000 kBit/s, 250 kBit/s, 500 kBit/s
Ethernet interface	**264639**	**265608**	**265613**
Number	1	1	1
IP address (automatically off)	192.168.0.11	192.168.0.11	192.168.0.11
Connection type	RJ45	RJ45	RJ45
Transmission rate	1 Gbit/s	1 Gbit/s	1 Gbit/s
EtherCAT interface	**264639**	**265608**	**265613**
Quantity	1	1	1
Connection	RJ45	RJ45	RJ45
Transmission rates	100 MBit/s	100 MBit/s	100 MBit/s
Serial interface	**264639**	**265608**	**265613**
Number of RS232 interfaces	1	1	1
Environmental data	**264639**	**265608**	**265613**
Ambient temperature			
Temperature range	0 - 50 °C	0 - 50 °C	0 - 50 °C
Storage temperature			
In accordance with the standard	EN 60068-2-1/-2	EN 60068-2-1/-2	EN 60068-2-1/-2
Temperature range	-25 - 60 °C	-25 - 60 °C	-25 - 60 °C
Climatic suitability			
In accordance with the standard	EN 60068-2-78	EN 60068-2-78	EN 60068-2-78
Humidity	90 % r. h. at 40 °C	90 % r. h. at 40 °C	90 % r. h. at 40 °C
Condensation during operation	Not permitted	Not permitted	Not permitted
EMC	EN 61000-6-2, EN 61000-6-4	EN 61000-6-2, EN 61000-6-4	EN 61000-6-2, EN 61000-6-4
Vibration			
In accordance with the standard	EN 60068-2-6	EN 60068-2-6	EN 60068-2-6
Frequency	10 - 150 Hz	10 - 150 Hz	10 - 150 Hz
Acceleration	max. 1g	max. 1g	max. 1g
Shock stress			
In accordance with the standard	EN 60068-2-27	EN 60068-2-27	EN 60068-2-27
Acceleration	15g	15g	15g
Duration	11 ms	11 ms	11 ms

Environmental data	264639	265608	265613
Protection type			
In accordance with the standard	**EN 60529**	**EN 60529**	**EN 60529**
Housing	**IP20**	**IP20**	**IP20**
In accordance with UL	**1,2,5,4/4X indoor use only**	**1,2,5,4/4X indoor use only**	**1,2,5,4/4X indoor use only**
Front	**IP65**	**IP65**	**IP66**
Mechanical data	**264639**	**265608**	**265613**
Dimensions			
Height	**332 mm**	**153 mm**	**222 mm**
Width	**412 mm**	**216 mm**	**332 mm**
Depth	**81,9 mm**	**85 mm**	**83 mm**
Weight	**4.510 g**	**1.740 g**	**2.730 g**

Where standards are undated, the 2014-08 latest editions shall apply.

12 Order reference

12.1 Product

Product type	Features	Order no.
PMI 607 primo	Operator terminal, 800 x 480 pixel resolution, capacitive touch-screen, motion control software preinstalled	265 608
PMI 612 primo	Operator terminal, 1280 x 800 pixel resolution, capacitive touch-screen, motion control software preinstalled	265 613
PMI 638 primo	Operator terminal, 1024 x 768 pixel resolution, resistive touch-screen, motion control software preinstalled	264 639